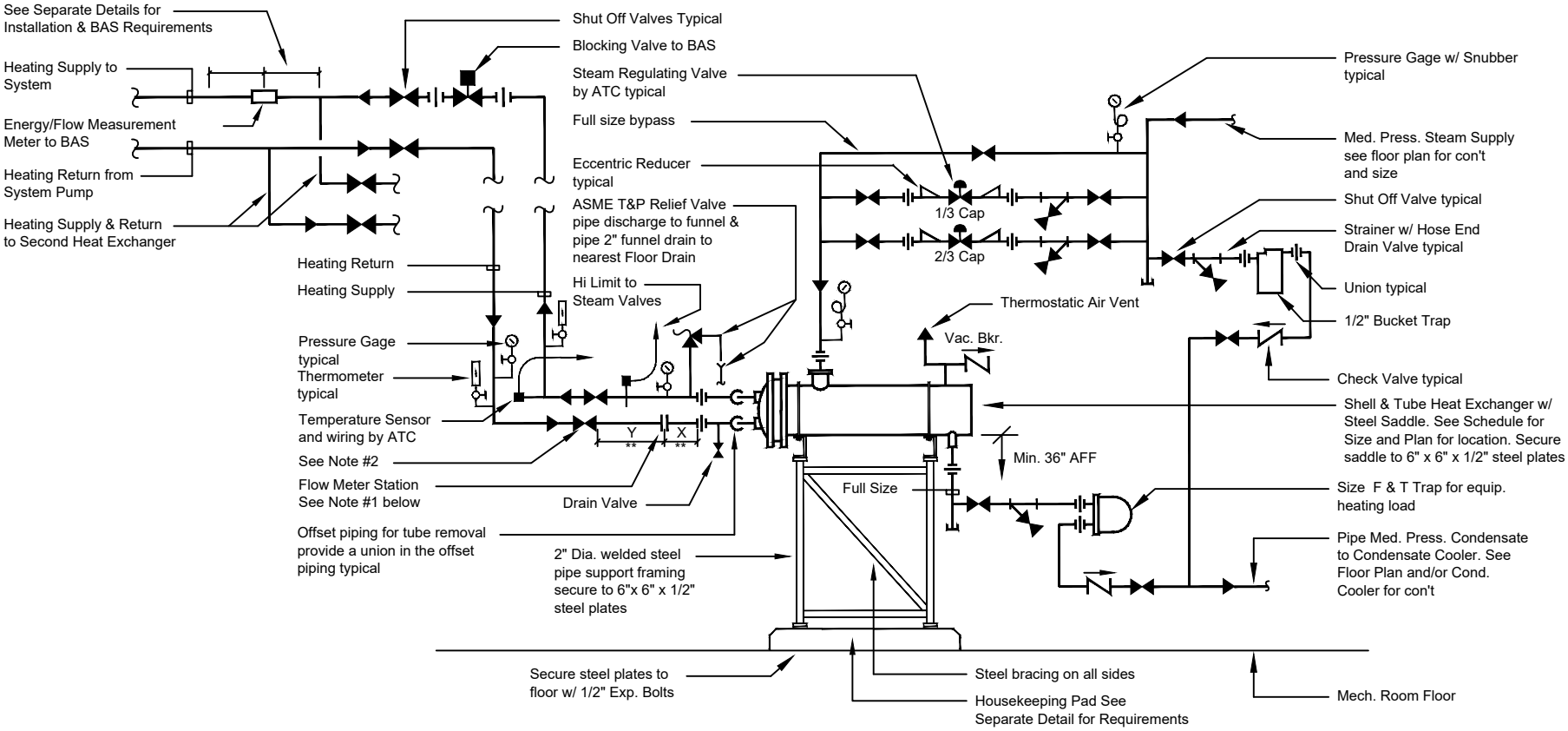

Detail : Heat Exchanger Installation

No Scale

Notes :

1. When using Flanged, Welded or Grooved Pipe provide a Flow Meter Station without a Balancing Valve as specified.
2. Use Valve as a Balancing Valve with a Memory Stop.
3. Where Multiple Heat Exchangers are Installed This Detail is Typical for each Heat Exchanger.
4. Construct Support Frame for the Number of Heat Exchangers Specified. Submit Details to A/E & UMB for Approval.
5. ** For X & Y Provide the Minimum Lengths of Straight Pipe per Manufacturer's Recommendations for each Flow Meter Fitting.
6. See Valve and Fitting Installation Detail for Additional Requirements